Quantum mirages in scanning tunneling spectroscopy of Kondo adsorbates: Vibrational signatures

J. W. Gadzuk*
National Institute of Standards and Technology Gaithersburg, Maryland 20899, USA

M. Plihal
KLA-Tencor Milpitas, California 95035, USA

(Received 18 November 2002; revised manuscript received 11 August 2003; published 18 December 2003)

Scanning tunneling microscopy/spectroscopy on Kondo systems consisting of magnetic atoms adsorbed upon nonmagnetic metal surfaces has demonstrated the ability of suitable two-dimensional nanostructures (such as ''quantum corrals'') to influence the surface electron transport that is part of the total scanning tunneling microscopy (STM) process. In a well known paradigm, an elliptical arrangement of Co atoms adsorbed on Cu(111) gives rise to an apparent enhanced electronic communication between points on the surface which are near the two elliptical foci. The question addressed here is whether a similar imaging/mirage effect has the potential for being interesting and/or useful when ''focused'' tunneling processes also involve the vibrational modes of the Kondo adsorbate. Theory for the total process of tip-to-corral-state tunneling, focus-to-focus transport via (corral) surface states [following Agam and Schiller Phys. Rev. Lett. **86**, 484 (2001)], and adsorbate resonance scattering has been developed within a localized polaron framework for incorporation of vibrational effects. Calculated lineshapes illustrate the potential utility of tunneling spectroscopy for obtaining detailed, atomic scale understanding of the role of the elliptical nanostructure size, shape, and chemical composition (as manifest in resonance characteristics) on both surface transport processes and also on the measurement methodologies required to probe such systems. This presents unusual challenges since all the characteristic energies (resonance position and width, vibrational, relaxation, and quantum corral) are likely to be of comparable magnitude in realistic experimental STM Kondo systems.

DOI: 10.1103/PhysRevB.68.235413 PACS number(s): 73.21.−b, 68.37.Ef, 72.10.Fk, 73.23.Hk

I. INTRODUCTION

Scanning tunneling microscope (STM) observations of ''quantum mirages'' of magnetic atoms situated within elliptical ''quantum corrals'' by Manoharan, Lutz, and Eigler[1] have received widespread attention in a diverse media, spanning the spectrum from that of theoretical physics[2–5] to corporate stockowner reports to the lay press. Part of the fascination and appeal has to do with the stunning STM pictures and the whimsical and suggestive names for various components of the system. Furthermore, the whole phenomenon is an intriguing mixture of intuitively satisfying classical physics supporting the observed quantum electron conduction behavior in an atom-by-atom-constructed nanostructure. The actual event is summarized as follows. An elliptical array of up to ~ 40 atoms (with characteristic dimensions $\leqslant 10$ nm) was fabricated on the (surface-state-containing) Cu(111) surface using the STM as the atom-positioning tool.[6] STM imaging and spectroscopy were then carried out on this Kondo system[7] with and without an additional Co atom placed at one of the foci of the ellipse, as a function of the transverse STM tip position with respect to the surface nanostructure.

Consider first the tunneling spectroscopy of single Kondo atoms which has been a topic of active study, both experimentally[8–10] and theoretically.[10–13] Consistent with these studies, Manoharan *et al.* observed differential conductance vs voltage characteristics when the STM tip was positioned directly over the added Co atom that displayed a Fano profile[14]

$$Y_{Fano}(\varepsilon')=\frac{(\varepsilon'+q)^2}{(1+\varepsilon'^2)} \tag{1}$$

associated with resonance tunneling involving the narrow (~ 10 meV) Co Kondo resonance straddling the Cu Fermi level. In Eq. (1), $\varepsilon' \equiv 2(\varepsilon-\varepsilon_a)/\Gamma$ where ε_a is the renormalized resonance position, Γ is the width ($=2kT_K$ with T_K the Kondo temperature), and q is the tip-position-dependent ratio of the tunneling amplitude involving the Co atom (the sum of direct tip-to-adatom plus tip-to-substrate followed by substrate-to-adatom amplitudes) divided by the direct tip-to-substrate amplitude. This is completely analogous to the ratio of the amplitude for excited-state-to-perturbed-discrete-state coupling divided by that of the excited-state-to-unperturbed-continuum coupling, as considered by Fano.[12,14] In addition to the tip-position dependence of q, deviations from the simple Fano expression are also expected as the tip is moved parallel to the surface.[11–13] Recent experiments have substantiated this picture for scanning tunneling spectroscopy of single atoms.[8,10]

The striking observations of Manoharan *et al.* occurred with the Co atom placed at one foci of an elliptical corral (possibly but not necessarily composed of identical Kondo atoms) and the STM tip placed over the other (unoccupied) foci. Remarkably, a replica of the on-top tunneling spectrum (conductance vs bias voltage), reduced in overall magnitude by an order of magnitude, was observed suggestive of a ''quantum mirage'' of the real adatom. While there is an instinctive intuitive appeal to any observation involving focused communication between two points within an elliptical

boundary,[15,16] when the size of the ellipse is reduced to the atomically resolved nm scale, the transport properties of the surface-state electrons (presumably the mediator of the communication) confined within the elliptical corral are strongly influenced by finite size quantization effects.[16,17] This may or may not lead to a surface transport picture in conflict with that of ballistic electron propagation as represented by simple classical ray tracing. A semiclassical description of the miraging was provided by Manoharan *et al.* in their initial paper.[1] The essential idea is that since all ballistic paths between the foci that involve a single elastic collision with the elliptical corral wall are of equal length, the phase accumulation is identical along all paths and the amplitudes add up in a constructively interfering way.[18] In contrast, the total amplitude for propagation between a random pair of points involves many paths of varying lengths hence varying phases, resulting in destructive as well as constructive interferences. Ultimately this is the source/origin of the spatial variation of the surface state wavefunctions (as stressed and exploited in the scarring theory of Heller[19]) and thus the standing waves associated with impurities, defects, steps, and other boundary conditions (such as that of the elliptical corral) which are so popular in STM imagery. Almost immediately upon publication of the ''quantum mirages,'' several theoretical papers appeared which provided plausible explanations for the effect.[2–4] The present work will be based on the exposition by Agam and Schiller (AS) which is particularly enlightening and useful for analytic work.[2] The question addressed here is to what extent can a similar imaging/mirage effect be expected (and does it have the potential for being interesting, useful, or both) when ''focused'' tunneling processes which also involve the vibrational modes of the adsorbate at the occupied focus are possible? While both the elastic and inelastic tunneling characteristics should be affected, the dominant vibrational influences should appear in the elastic tunneling channel.[20] These can be treated within the polaron framework of localized (single site) vibrational renormalization and/or apparent sideband generation in electron hopping/tunneling/conduction which are issues of significance in molecular polarons,[21] mixed valence systems,[22,23] and various electron spectroscopies.[24–27] In addition, vibrationally inelastic tunneling, first considered theoretically within the context of junctions[28] and then quantum wells,[29,30] has taken on a life of its own within the STM world.[31] For the most part, the theory resembles basic inelastic resonance electron scattering, well known in electron-molecule collision theory.[30,32] While it might be more transparent to first consider the vibrational effects in simple non-Kondo systems, the experimental facts show that mirages have been observed only for scattering from the extraordinarily narrow Kondo resonances. This suggests that viable candidates for vibrationally influenced mirages are necessarily restricted to Kondo adsorbates, thus raising the issue whether coupling between the vibrational mode and the magnetic adsorbate might suppress the Kondo effect. One thing is certain; that with the ''correct'' coupling (that one dictated by nature), the observed Kondo effect has not been eliminated. Suggestive insights have been provided from theoretical studies on Kondo quantum dots irradiated by ac fields,[33,34] where the field is imagined to simulate the postulated decoherence effects of the localized vibrational mode acting upon the Kondo resonance. While this will be discussed in more detail later, the arguements of both Kaminski *et al.*[33] and Nordlander *et al.*[34] suggest that for the low vibrational frequencies ($\hbar\omega \approx kT_{\mathrm{Kondo}} \approx 10$ meV) and 4-K ambient temperatures (hence low oscillator excited state population which plays part of the role of the incident ac field intensity) characterizing the STM Kondo studies, suppression of the Kondo resonance by oscillator-induced decoherence should not be a serious problem.

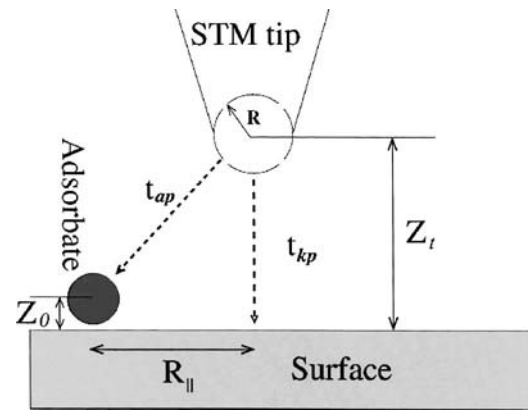

FIG. 1. Schematic picture of the STM geometry.

With all this in mind, the modest plan for this paper is to present an extension of the AS mirage theory which also includes a vibrationally active adsorbate at one of the foci of the elliptical corral. The elemental STM model together with the AS extensions are described in Sec. II. The theoretical basis of vibrationally assisted, focused (via the AS ''process'') resonance tunneling spectroscopy, viewed as a variation on the theme of molecular polarons, is taken up in Sec. III and some numerical consequences presented in Sec. IV. Section V concludes with a general summary.

II. STM MIRAGE SPECTROSCOPY

Almost all readily implimented theories of STM processes seem to be extensions of the Tersoff-Hamann model in which the STM tip is taken to be a single s-wave-emitting atom connected to a reservoir of electrons occupying a structureless continuum of tip conduction band states.[35–37] The STM geometry is shown in Fig. 1 for an example in which the tip, a distance z_t from the surface, is also near an adsorbate. In its simplest form, direct tunneling between the tip and surface is characterized by a tunneling amplitude$\equiv t_{kp}$ whose magnitude is an exponentially decreasing function of increasing z_t. Some form of resonance tunneling involving the adsorbate is also possible for which the tip-to-adsorbate amplitude$\equiv t_{ap}$ also drops exponentially with increasing separation, going to zero as $\vec{R}_{\parallel}$ increases, even for fixed but ''small'' z_t. As a result, if the tip is more than a few atomic radii distant from the adsorbate, then any significant tunneling that is influenced by the adsorbate involves direct tip-to-surface tunneling followed by some form of on/through- surface electron transport/communication between points within

the "shadow" of the tip and the adsorbate. This "communication" is expected to be both oscillatory and long range (inverse power) (Refs. 11–13) and can be mediated either through surface state electrons or by bulk states according to the magnitude of their exponentially decaying tails extending out into the vacuum.[13] The modified behavior due to adsorbates has been given equivalent explanations, explicitly in terms of an adsorbate-induced change to the surface local density of states (LDOS) or alternatively as a resonance scattering cross section involving sequential electron tunneling, transport, and short range adsorbate interactions.

A practical consequence of the Tersoff-Hamann model[35] is that in the limit of vanishing t_{ap}, at zero temperature the differential conductance of the STM configuration shown in Fig. 1 is proportional to the LDOS of the substrate evaluated at $\vec{R}_{tip}$, the position of the center of the (s-atom, constant DOS) STM tip; that is

$$\sigma = dj/dV \propto \rho_{sub}(\vec{R}_{tip};V), \tag{2}$$

where V is the voltage applied to the surface (positive for tip-to-surface electron flow). For many realizations, $\rho_{sub}(\vec{R}_{tip};V)$ in Eq. (2) can be approximated as[37]

$$\rho_{sub}(\vec{R}_{tip};V) \approx \rho_{SS}(\vec{R}_{\parallel};V)|t_{kp}(z_t;V)|^2,$$

which is the product of $|t_{kp}|^2$, the direct tip-to-surface tunneling probability multiplied by the surface LDOS at $\vec{R}_{\parallel}$ which would be modified from the uniform surface form if an adsorbate is located at some $\vec{R}_o$. A characteristic feature of (111) noble metal surfaces is a parabolic two-dimensional surface state band ($\varepsilon = \varepsilon_o + \hbar^2 k_{\parallel}^2/2m^*$ with $m^*/m_{el} \sim 0.4$) starting (at $k_{\parallel}=0$) ~ 0.5 eV below ε_F, the Fermi level and crossing ε_F in the range $k_{\parallel} \approx 0.15$–$0.2$ Å^{-1}.[38] Since the STM is particularly (overly?) sensitive to these surface states responsible for many of the dramatic STM images involving wave like interference phenomena associated with reflections/scattering from various boundaries and/or adsorbates, the noble metal (111) surfaces are very popular choices for picture-producing STM studies. The quantum mirages under consideration here were so observed. Following the leads of A.S. (Ref. 2) and Fiete *et al.*,[3] all electron transport and surface point-to-point communication is assumed to occur via the two-dimensional surface state electron gas, in which case

$$\rho_{SS}(\vec{r};\varepsilon) = -\frac{1}{\pi}\mathrm{Im}\{G_{SS}(\vec{r},\vec{r};\varepsilon)\}, \tag{3}$$

where $G_{SS}(\vec{r},\vec{r};\varepsilon)$ is the surface state electron Green's function that includes the influences of whatever adsorbates, boundaries, and/or "nanostructures" are on the surface. For the free surface, $\rho_{SS}(\vec{R}_{\parallel};\varepsilon) \equiv \rho_{SS} = m^*/2\pi\hbar^2$, independent of the position and energy and the two-dimensional free electron Green's function is

$$G_o(\vec{r},\vec{r}';\varepsilon) = -i\pi\rho_{SS}H_o^{(1)}[k(\varepsilon)|\vec{r}-\vec{r}'|], \tag{4}$$

where $H_o^{(1)}(x)$ is the zeroth-order Hankel function with asymptotic, large x form

$$\lim_{x\to large} H_o^{(1)}(x) \approx \sqrt{2/\pi x}\exp(ix - i\pi/4). \tag{5}$$

The mirage results were obtained by taking the difference between measured dj/dV characteristics from a corral-containing-surface with and without an extra atom at one focus. AS considered as the theoretical equivalent, the additional contribution to the LDOS [hence dj/dV via Eq. (2)] due to the extra atom at $\vec{R}_o$ which is given by

$$\delta\rho(\vec{r},\varepsilon) = -\frac{1}{\pi}\mathrm{Im}\{G(\vec{r},\vec{R}_o;\varepsilon)t_s G_K(\varepsilon)t_s G(\vec{R}_o,\vec{r};\varepsilon)\} \tag{6}$$

where $G(\vec{r},\vec{r}';\varepsilon)$ is the retarded surface electron Green's function for an empty ellipse,

$$G_K(\varepsilon) \cong Z_K/(\varepsilon - \varepsilon_K + i\Delta_K) \tag{7}$$

is that part of the adsorbate d-electron Green's function representing the Kondo resonance[7] at ε_K with $\Delta_K = kT_K$ (T_K is the Kondo temperature ~ 10 K) and Z_K the spectral weight which AS take as

$$Z_K \Rightarrow \Delta_K/\Delta_{Tot} = \Delta_K/(\pi\rho_s t_s^2 + \pi\rho_b t_b^2), \tag{8}$$

where $t_s(t_b)$ is the transfer or hybridization matrix element between surface (bulk) states and the adsorbate d orbital. Δ_{Tot}, the total width reflects the mixing of the adsorbate state with both surface and bulk states of the substrate. For present purposes, $G(\vec{r},\vec{r}';\varepsilon)$ is taken as the sum of $G_o(\vec{r},\vec{r}';\varepsilon)$, the free surface propagator [Eq. (4)] plus the lowest order corral correction, a single scattering with a corral atom. Therefore,

$$G(\vec{r},\vec{r}';\varepsilon) \approx G_o(\vec{r},\vec{r}';\varepsilon) + \sum_{j=1}^{N} G_o(\vec{r},\vec{R}_j;\varepsilon)\hat{T}_j G_o(\vec{R}_j,\vec{r}';\varepsilon), \tag{9}$$

where $\hat{T}_j$, the t matrix for scattering of surface state electrons incident upon a corral atom at site $\vec{R}_j$, is

$$\vec{T}_j \cong it_s^2\,\mathrm{Im}\,G_j(\varepsilon) = \frac{\pi\rho_s t_s^2}{\pi\rho_s t_s^2 + \pi\rho_b t_b^2}\frac{1}{i\pi\rho_s}\left(\frac{\Delta_a^2}{(\varepsilon-\varepsilon_a)^2+\Delta_a^2}\right)$$
$$\equiv \frac{t}{i\pi\rho_s}T_{o,a}(\varepsilon). \tag{10}$$

In Eq. (10), $t \equiv \Delta_s/\Delta_{Tot}$, the probability that an incident surface state electron will scatter into a surface rather than bulk state was taken to be ~ 0.5 by Fiete *et al.* in their studies of standing waves in quantum corrals.[3] The Lorentzian function $T_{o,a}(\varepsilon)$ carries the signature of the scattering resonance, its position and width. For instance, if scattering involves the Kondo resonance, then $\varepsilon_a = \varepsilon_K \cong \varepsilon_{Fermi}$ and $\Delta_a = kT_K \leqslant 10$ meV. In contrast, for resonance d-orbital scattering, $\Delta_d \cong 0.5$ eV and $T_{o,a}(\varepsilon)$ can be regarded as an innocuous constant of order unity over the relevant energy range of several kT_K around the Kondo resonance. Since AS considered only LDOS and resonances at the Fermi level, $T_{o,a}(\varepsilon_{Fermi}) = 1$ and thus $\hat{T}_j = t/(i\pi\rho_s)$ in their treatment.

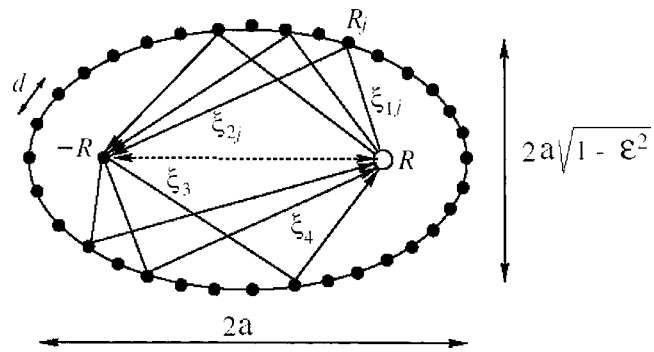

FIG. 2. Illustration of an elliptic corral and the classical trajectories associated with the quantum mirage. The ellipse is characterized by a semimajor axis length a and an eccentricity ε. The mean distance between adjacent atoms forming the ellipse perimeter is d [from Agam and Schiller (Ref. 2)].

Now consider the change in the LDOS at the unoccupied focus $\vec{r}=\vec{R}$ when an atom is placed at the opposite position, that one at $\vec{r}=-\vec{R}$ in Fig. 2. The Green's function $G(\vec{R},-\vec{R};\varepsilon)$ appearing in Eq. (6) is expressed in Eq. (9) as the sum of

$$G_o(\vec{R},-\vec{R};\varepsilon)\cong -i\rho_s\left(\frac{\pi}{Ek(\varepsilon)a}\right)^{1/2}e^{i2Ek(\varepsilon)a-i\pi/4} \quad (11)$$

[from Eqs. (4) and (5) with E the eccentricity of the ellipse] and

$$G_1(\vec{R},-\vec{R};\varepsilon)\equiv\frac{t}{i\pi\rho_s}T_{o,a}(\varepsilon)\sum_{j=1}^{N}G_o(\vec{R},\vec{R}_j;\varepsilon)\times G_o(\vec{R}_j,-\vec{R};\varepsilon). \quad (12)$$

While individually $G_o(\vec{R},\vec{R}_j;\varepsilon)\propto e^{ik(\varepsilon)\zeta_{1,j}}$ and $G_o(\vec{R}_j,-\vec{R};\varepsilon)\propto e^{ik(\varepsilon)\zeta_{2,j}}$ are path dependent, the product of the exponentials appearing within the sum on corral sites in Eq. (12) is identical for all paths by virtue of the defining characteristic of the ellipse ($\zeta_{1j}+\zeta_{2j}=2a$), and this is the origin of the dominance of the scattered/focused trajectories over the direct paths which are described by $G_o(\vec{R},-\vec{R};\varepsilon)$. Using Eqs. (4) and (5) and the fact that $\zeta_{1,j}+\zeta_{2,j}=2a$, Eq. (12) reduces to

$$G_1(\vec{R},-\vec{R};\varepsilon)\cong\frac{2tT_{o,a}\rho_s}{k(\varepsilon)}e^{2ik(\varepsilon)a}\sum_{j=1}^{N}[\zeta_{1,j}\zeta_{2,j}]^{-1/2}. \quad (13)$$

AS approximate the discrete sum in Eq. (13) by a line integral over the ellipse and cleverly find that $\Sigma_{j=1}^{N}\cdots\Rightarrow 2\pi/d$ where d is the mean spacing between discrete lattice sites of the elliptical corral. Consequently Eq. (13) is

$$G_1(\vec{R},-\vec{R};\varepsilon)=\frac{\rho_s 4\pi t T_{o,a}(\varepsilon)}{k(\varepsilon)d}e^{2ik(\varepsilon)a}. \quad (14)$$

By comparison of the prefactors in Eqs. (11) and (14), it follows that when $d/Ea\ll 16\pi t^2/k(\varepsilon)d$ (as it is for $d\sim 10$ Å, $a\sim 70$ Å, $k(\varepsilon)\sim 0.2$ Å^{-1}, $t\sim 0.5$, and $0.05<E<1$ appropriate to the mirage experiments[1]), $G_1(\vec{R},-\vec{R};\varepsilon)$ provides the dominant contribution to $G(\vec{R},-\vec{R};\varepsilon)$ in Eq. (9). Dropping the contribution from the direct term which is responsible for the characteristic lineshape observed for uncorraled Kondo adsorbates,[10–13] the change in the LDOS at $\vec{R}$ due to the corraled atom at $-\vec{R}$ that follows from Eqs. (6), (10), and (14) is

$$\delta\rho(\vec{R};\varepsilon)\approx\rho_s\frac{16t^3}{(k(\varepsilon)d)^2}T_{o,a}^2(\varepsilon)\mathrm{Im}\left\{\frac{\Delta_K e^{i\delta(\varepsilon)}}{\varepsilon-\varepsilon_K+i\Delta_K}\right\}, \quad (15)$$

with $\delta(\varepsilon)\equiv 4k(\varepsilon)a$. Equation (15) is an extension of the final result of AS [their Eq. (15)] that includes final states away from the Fermi level. As will be discussed in Sec. IV, corral-size-dependent oscillatory structure in $\delta\rho(\vec{R};\varepsilon)$ due to the energy dependence of $\delta(\varepsilon)$ is a reflection of the quasidiscrete energy levels of the quantum corral. For the specific example of a Kondo resonance ($\Delta_K\sim 10$ meV) on an adatom placed at the focus of an $\sim 5-10$-nm corral, the corral energy-level-spacing is comparable with the resonance width.

III. VIBRATIONAL/POLARON MANIFESTATIONS

One of the present goals is to understand in what ways the mirage effect might survive and influence any observable consequences of adsorbate vibrational modes (either that of the adsorbate-surface bond or an intra-molecular mode in the case of an adsorbed molecule) in STM spectroscopy bearing in mind that experimentally, the Kondo resonance has been shown to be necessary for the mirageing.[1] Within the context of the AS picture, vibrational phenomena are readily dealt with drawing upon analogies with local polaron effects in mixed valence systems.[22,23] In both the mixed valence and the mirage/STM problems, a crucial issue is the determination of the change in LDOS as a result of a localized oscillator that is subjected to a perturbation taken to be both linear in oscillator displacement and proportional to the fluctuating electron occupation at the localized site. This suggests the incorporation of a displaced oscillator Hamiltonian

$$H_{vibe}=\hbar\omega_o b^+b+\lambda n_d(b+b^+) \quad (16)$$

into the adsorbate Green's function, in which case the zero temperature, on-focus resonance T matrix takes the form

$$t_sG_K(\varepsilon)t_s\Rightarrow T_{a;vibe}=\left\langle 0\left|t_s\frac{1}{\varepsilon-\varepsilon_K-H_{vibe}+i\Delta_K}t_s\right|0\right\rangle. \quad (17)$$

In Eq. (16), ω_o and b and b^+ are the (assumed harmonic) frequency and boson operators for the oscillator originally in its ground state $|0\rangle$, λ is the strength of the electron-(localized)phonon coupling, and n_d is the occupation number of the localized electronic state which at any given instant is either zero or one although the time-averaged occupation is fractional. Essentially this is what correlates the electron and vibrational dynamics. When the localized state is occuppied,

a driving force linear in oscillator displacement is applied and when unoccuppied, the force is released. Inserting a complete set of displaced oscillator states [Eq. (16) with $n_d=1$] and "completing the square" in H_{vibe},[27,39] the leading form of Eq. (17) becomes

$$T_{a;vibe}=\sum_n t_s\langle 0|\tilde{n}\rangle \frac{1}{\varepsilon-(\varepsilon_K-\Delta\varepsilon_r)-n\hbar\omega_o+i\Delta_K}\langle\tilde{n}|0\rangle t_s, \tag{18}$$

where $\Delta\varepsilon_r=\lambda^2/\hbar\omega_o\equiv\beta\hbar\omega_o$ and $\langle\tilde{n}|0\rangle$ are vibrational overlap integrals of the (unoccupied resonance) vibrational-ground state with the nth excited state of the displaced oscillator appropriate to the occupied resonance. As written in Eqs. (17) and (18), any electron self-energy corrections due to the resonant electron-oscillator coupling are assumed to be independent of ε over the limited energy range encompassing the useful spectrum, as is common practice, thereby allowing them to be absorbed into possibly renormalized values of ε_K and Δ_K without any loss of generality. Furthermore, the eigenvalue problem represented by Eqs. (16) and (17) is equivalent to the Lanczos procedure of diagonalizing a tridiagonal matrix,[40] conveniently given a closed recursive representation in terms of continued fractions.[41] Cini[25] and also Hewson and Newns[23] have derived such an "exact" continued fraction expression which retains both the correct energy and n dependence of ε_K and Δ_K. For the parameter range of relevance to the present problem, Eq. (18) provides an excellent approximation of the "exact" result in terms of the product of the overlap integrals (also known as Franck-Condon factors) for the displaced harmonic oscillator, Poisson distributed according to

$$|\langle 0|\tilde{n}\rangle|^2=e^{-\beta}(\beta^n/n!). \tag{19}$$

Consequently, in analogy with Eq. (15) but with the inclusion of the vibrational effects embodied in Eqs. (18) and (19), the change in the LDOS at $\vec{R}$ due to the vibrationally alive and corraled adatom at $-\vec{R}$ is given by

$$\delta\rho_v(\vec{R};\varepsilon)\approx\rho_s\frac{16t^3}{(k(\varepsilon)d)^2}T_{0,a}^2(\varepsilon)\sum_{n=0}^{\infty}e^{-\beta}(\beta^n/n!)\times\mathrm{Im}\left\{\frac{\Delta_K e^{i\delta(\varepsilon)}}{\varepsilon-(\varepsilon_K-\Delta\varepsilon_r)-n\hbar\omega_o+i\Delta_K}\right\}, \tag{20}$$

which is the formal end result. As it now stands, this expression represents an apparent "elastic line" and a series of virtual multi-boson satellites or sidebands centered on $\varepsilon_n=\varepsilon_K-\Delta\varepsilon_r+n\hbar\omega_o$, each of width Δ_K. Viewed in this way, Eq. (20) is the equivalent of the wide-band limit theory obtained within the context of both the mixed valence[23] and core level spectroscopy[24,25] inquiries. It is important to note though that this completely "Poisson-redistributed" correction to the LDOS is still a purely elastic effect that should not be confused with inelastic resonance tunneling/scattering.[20]

Next consider some numerical estimates for the all-important β. As it stands, Eq. (16) describes a vibrational mode, possibly one associated with the (neutral) adatom-substrate bond represented by the low-lying potential energy

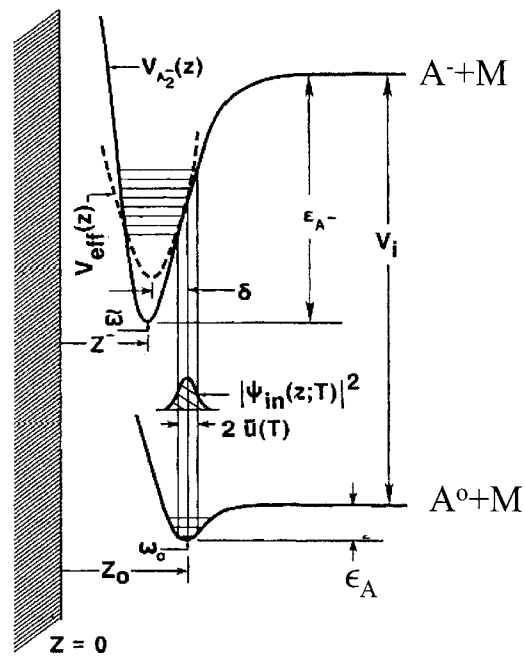

FIG. 3. Potential-energy curves for neutral (A^0+M) and negative (A^-+M) adsorbate interaction with surface. The dashed curve $V_{\mathrm{eff}}(z)$ is the equivalent "best harmonic approximation" discussed in the text.

curve labeled A^o in Fig. 3. Full electron occuppation within the resonant level [$n_d=1$ in Eq. (16)] converts the neutral adparticle into a negative ion which bonds more strongly with the substrate, as suggested by the potential curve A^- in Fig. 3. Since now $n_d=1$ in Eq. (16), this enhanced bonding is automatically accounted for within the context of the displaced oscillator model[27,39] A specific approximate form for the ion curve that has proven useful in many other contexts[42] is based on additional image-potential attraction resulting in an augmented negative ion-surface curve:

$$V_-(z)\cong V_o(z)-e^2/4(z-d_o)+V^*, \tag{21}$$

where V^* is a constant whose value is irrelevant for present purposes, z is the distance to a sensibly defined origin, and d_o is the location of the image plane with respect to that origin.[43] The harmonic approximation is certainly valid for the low-lying vibrational states on V_o in which the curvature $d^2V_o/dz^2|_{z=z_o}=k=M\omega_o^2$. When considering Franck-Condon transitions from A^0 to A^-, it is efficient to use "the best harmonic approximation" (BHA),[44] an expansion of V_- about the point $z=z_o$, the equilibrium position of the neutral rather than about that of the ion. Since $\Delta\varepsilon_r=1/2k(z_o-z_-)^2$ (which really provides the specification of z_- in the BHA using $\omega_-=\omega_o$), it is straightforward to show that

$$\beta=\Delta\varepsilon_r/\hbar\omega_o\approx\left(\frac{\bar{u}}{\hbar\omega_o}\frac{dV_-(z)}{dz}\bigg|_{z=z_o}\right)^2=\left(\frac{\bar{u}}{\hbar\omega_o}\frac{e^2}{4(z_o-d_o)^2}\right)^2, \tag{22}$$

where $\bar{u} \equiv (\hbar/2M\omega_o)^{1/2}$ is the spread of the ground state harmonic oscillator wave function. For a not-unreasonable choice of $z_o - d_o \approx 1-2$ Å, $\hbar\omega_o \approx 50$ meV, and $M \approx 60$ (implying $\bar{u} \approx 0.04$ Å), it follows that $\beta \approx 0.5-1.0$, which more or-less provides an upper limit to the scale of the polaronic/vibrational modifications to the corral LDOS and thus the mirage STM spectra. It must be emphasized that any observable consequences are of course expected to be less than this.

Finally return to the question of possible suppression of the Kondo resonance due to its interaction with the oscillator. This issue has been addressed theoretically within the context of a Kondo impurity irradiated by an ac field.[33,34] Kaminski *et al.* show that for a specified range of parameters, the Kondo resonance could be suppressed by a boson-assisted spin-flip tunneling mechanism (proportional to the intensity of the field) that introduces a source of decoherence.[33] While instructive, the analogy with the ac field is imperfect since the properties of a quantized boson system in the low temperature, thus low (photon or vibrational quantum)-occupation-number limit are not well represented by a classical driving field of constant intensity. These limitations notwithstanding, the findings of both Kaminski and Nordlander support the neglect of oscillator decoherence effects under the operating conditions of the STM experiments. Both groups consider a Kondo resonance in which the virtual level position is subjected to an ac modulation $= eV_\omega \cos(\omega t)$. Kaminski *et al.* demonstrate that the rate of low-intensity ac-field-induced spin-flip-tunneling that follows from the Fermi golden rule [Eq. (9) in Ref. 33] is

$$1/\tau \cong \frac{\omega}{2\pi}\left[\frac{\Gamma_{Tot}}{\tilde{\varepsilon}_d}\right]^2\left[\frac{eV_\omega}{\tilde{\varepsilon}_d}\right]^2, \tag{23}$$

where $\Gamma_{Tot} < 1$ eV is the total width of the virtual level characterized by

$$\tilde{\varepsilon}_d \equiv \frac{(U-\varepsilon_d)\varepsilon_d}{U} \geqslant 1 \ \text{eV}$$

with ε_d and U-ε_d the ionization and electron affinity energies of the Kondo atom or quantum dot, both of order 1 eV, and $U > 1$ eV the electron-electron Coulomb repulsion. A suppression of the Kondo effect by the oscillatory field occurs when this inverse spin-decoherence time satisfies the condition

$$\hbar/\tau(V_\omega) \geqslant kT_{Kondo}. \tag{24}$$

The oscillating-field model provides guidelines for the present polaronlike problem if eV_ω, the field amplitude is replaced with $\Delta\varepsilon_r = \beta\hbar\omega$, the mean Franck-Condon "excitation energy." Setting $\hbar\omega \leqslant 50$ meV, $(\Gamma_{Tot}/\tilde{\varepsilon}_d) \leqslant 1$, and $1/\tilde{\varepsilon}_d \leqslant 1$ eV^{-1} as upper limits appropriate to the STM Kondo mirage systems, Eq. (23) yields $\hbar/\tau(\Delta\varepsilon_r) \leqslant 0.2\beta^2 K$ which, with $\beta < 1$ [as follows from Eq. (22)], shows that $\hbar/\tau(eV_\omega \Rightarrow \Delta\varepsilon_r) \ll kT_{Kondo} \approx 10-50$ K, falling far short of the conditions required for oscillator suppression of the Kondo resonance. Going one step farther, Nordlander *et al.* demonstrate that not only does the oscillating field at this intensity level not destroy the resonance, but it redistributes the original peak between a shifted Kondo peak and a series of satellite peaks in the differential conductance at $\varepsilon = \varepsilon_o + n\hbar\omega$, in analogy with expectations expressed by Eq. (20). The zero-quantum conductance is somewhat weakened from its unitary limit and the satellite peaks appear at its expense. This departure is small as long as the amplitude of the ac modulation eV_ω or the Franck-Condon energy shift $\Delta\varepsilon_r$ and the vibrational energy $\hbar\omega$ are small relative to the "large" energy parameters such as $\tilde{\varepsilon}_d$, U, and Γ_{Tot}. These conditions are well met for the STM effects under consideration here.

IV. RESULTS

In trying to understand the possible role of localized vibrational modes on the LDOS (hence STM spectra) associated with elliptically corraled focus and mirage atoms, it is useful to look first at the simple example in which vibrations are not included. This more clearly demonstrates the pure role of finite-size quantization of surface state electrons, as accounted here through $G_1(\vec{R},-\vec{R};\varepsilon)$ [Eq. (14)]. The oscillatory behavior of $e^{i\delta(\varepsilon)}$ in G_1 and thus $\delta\rho(\vec{R};\varepsilon)$ [Eq. (15)] depends upon the phase accumulation for electron propagation between elliptical foci given a single scattering with the corral "wall" and it is here that the characteristic length scale of the nanostructure in relation to the propagating surface state electron wavelength enters.

Consider the change in the LDOS given by Eq. (15) for the rigid adatom. Since the Kondo resonances are near the Fermi level, the function $k(\varepsilon \approx \varepsilon_F)^{-2}$ in Eq. (15) provides a slowly varying (with energy) and harmless background. The corral atom t matrix and thus $T_{o,a}(\varepsilon)$ in Eq. (15) is specified by Eq. (10). Experimentally the quantum mirages were observed for corrals composed of non-Kondo as well as Kondo adsorbates[1] which implies that the mirage-producing scattering mechanism from the corral wall atoms or molecules did not involve the narrow Kondo resonance. More likely the broad d-orbital resonance scattering was responsible. Since $\Delta_d \approx 0.5$ eV $\gg \Delta_K \approx 0.01$ eV, Eq. (10) implies that $T_{o,a}(\varepsilon_F \pm \sim\Delta_K) \approx 1$ over the entire energy range of the corral-embellished Kondo resonance. Consequently any significant energy dependence of $\delta\rho(\vec{R};\varepsilon)$ due to the corral occurs only when the size-quantization energy scale (as embodied here by the energy range over which $4k(\varepsilon)a$ changes by $\sim\pi$) is comparable with Δ_K, the Kondo resonance width. To this end, $\delta\rho(\vec{R};\varepsilon)$ given by Eq. (15) as a function of ε is shown both in Fig. 4 and also in the left hand column of Fig. 5, letting $\varepsilon_K = 0$ define the energy origin and treating a, the ellipse size [and thus $\delta(\varepsilon;a)$] parametrically. Consider first Fig. 5 in which for present purposes, the dimensionless x variable can be regarded as (identically) $5\varepsilon/\Delta_K$ to facillitate comparison with Fig. 4. For reference purposes, the limiting case in which $\delta(\varepsilon;a=0)=0$ has been labeled "$a=0$" to denote that extreme in which there is no additional phase due to interfacial propagation before and after corral scattering. It is in this (no-phase-accumulating) sense alone that the terminology "$a=0$" should be given any symbolic meaning. In this limit, Eq. (15), and the top left curve in Fig. 5 suggest

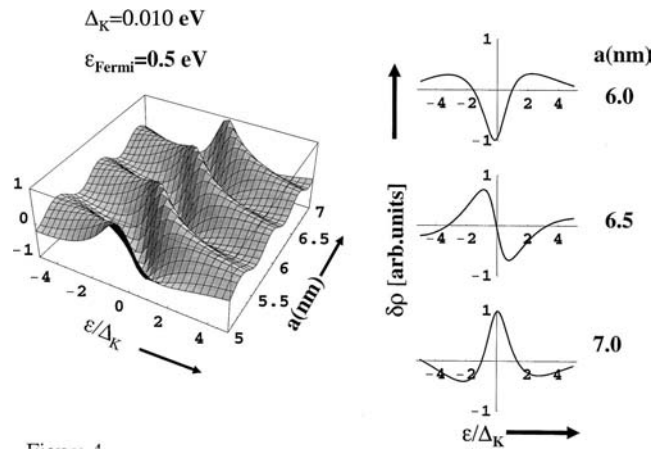

FIG. 4. Corral-induced change in the adsorbate-mirage LDOS (arb.units) at the unoccupied foci vs ε/Δ_K for various corral lengths a in nm, from Eq. (15). The left hand topographic plot treats a as a continuous variable in the range 5–7 nm. The right hand column shows three constant-a spectra, as labeled. The Kondo resonance width is taken to be 0.010 eV.

that the energy dependence of $\delta\rho(\vec{R}=-\vec{R}=0;\varepsilon)$ is simply proportional to the LDOS of the adsorbate. Increasing the magnitude of a and thus $\delta(\varepsilon;a)$ such that the energy dependence of G_1 plays a dominating role leads to two interesting features in $\delta\rho$. First is the appearance of a general oscillatory behavior with frequency proportional to corral size, as is apparent in the progression of LDOS displayed in the left hand column of Fig. 5. Second is the size-dependent mixing of the symmetric $\mathrm{Im}\,G_K(\varepsilon)$ and antisymmetric $\mathrm{Re}\,G_K(\varepsilon)$ with consequences that the apparent mirage LDOS oscillates between the resonance, the asymmetric, and the anti-resonance shape readily discerned in Figs. 4 and 5, left. Figure 4 shows mirage-LDOS changes in some detail within the range of corral sizes realized in actual experiments. Here it can be seen that a whole family of Fano-like line shapes [Eq. (1) with $0\leqslant|q|<large$] repeats itself as the corral size is incremented by ~ 0.5 nm. That cyclic line shape changes occur on this particular distance scale is a direct consequence of the commensurability of the size-quantization oscillations with Δ_K.[45] A related effect is expected for processes in mesoscopic systems such as excitonic or impurity optical absorption in quantum dots as a function of the dot size.[46] It should be pointed out that there is a meaningful connection between the Fano-like line shapes obtained here [as represented by Eq. (15)] for resonant STM processes involving scattering from a boundary wall or defect (such as the elliptical coral) and the closely related (but distinctly different) ones that characterize direct processes such as those in single, uncorraled atom systems. In fact it was within this context that Fano shapes were first considered in STM studies.[8] In both cases the resonance tunneling process basically involves tip-to-surface tunneling followed by surface propagation to the adsorbate. For the focus-to-focus corral problem the path length via corral scattering is $2a$. On the otherhand, for single atom systems, only direct propagation from the tip shadow to the adsorbate can occur [accounted for by $G_o(\vec{R},-\vec{R};\varepsilon)$ of Eq. (11) but which has been neglected in the AS treatment of the corral problem] and the $\vec{R}\rightarrow-\vec{R}$ path length, in terms of the ellipse variable for which a comparison is being made, is $2Ea$. The resulting free-atom change in LDOS is similar to Eq. (15) but with appropriately modified prefactors and the phase $\delta(\varepsilon)$ replaced with $\delta_{dir}(\varepsilon)=4k(\varepsilon)Ea+\delta_o\equiv 2k(\varepsilon)R_{\parallel}+\delta_o$ where, as a result of Eqs. (6) and (11), $\delta_o=-\pi/2$ but which could also include the $t_{ap}=0$ contribution to the original Fano asymmetrizing.[10–14] It is at this point in their modeling that Fiete *et al.* introduce an equivalent phase shift identified as: "δ_{bg} is a background phase shift....that controls the resonant lineshape of the adatom scattering cross section."[3] Consequently

$$\delta\rho_o(R_{\parallel};\varepsilon)=\rho_s\frac{2t}{\pi k(\varepsilon)R_{\parallel}}\mathrm{Im}\left\{\frac{\Delta_K e^{i\delta_{dir}(\varepsilon)}}{\varepsilon-\varepsilon_K+i\Delta_K}\right\}, \qquad (25)$$

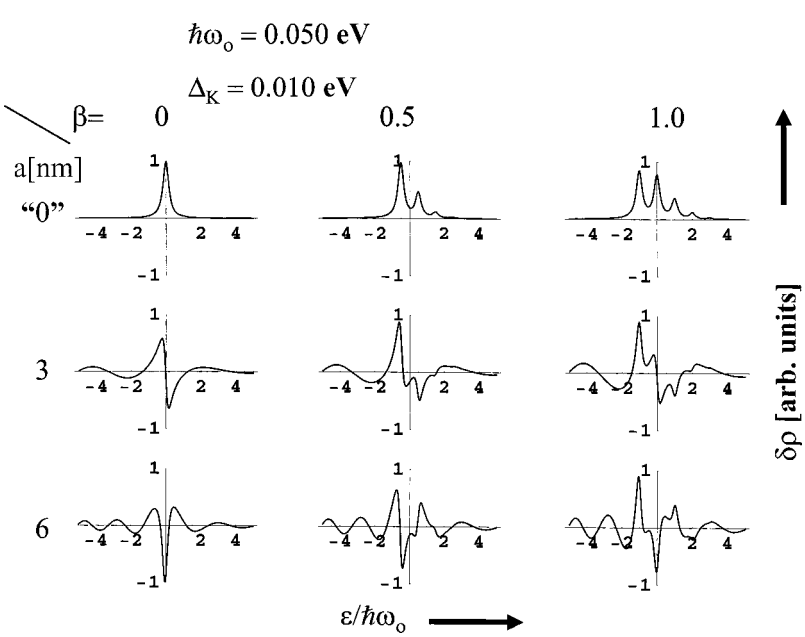

FIG. 5. Corral-induced change in the adsorbate-mirage LDOS (arb.units) at the unoccupied foci vs $\varepsilon/\hbar\omega_o$, from Eq. (20), for a system with $\hbar\omega_o=0.050$ eV and $\Delta_K=0.010$ eV. The corral size parameter a varies by row and the electron-vibrational coupling parameter β by column, as labeled. The row labeled $a=$''0'' is only meant to imply that $\delta(\varepsilon)=\delta(\varepsilon;a=0)=0$ in Eq. (20).

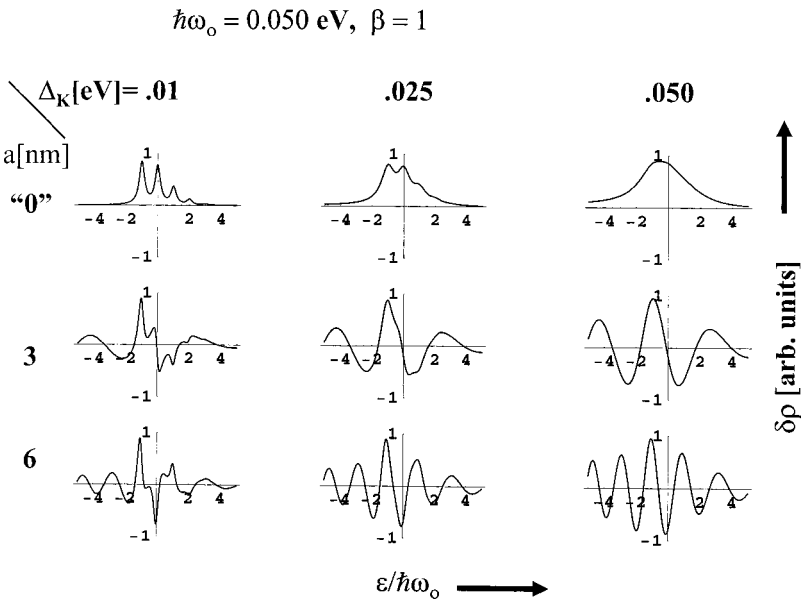

FIG. 6. Corral-induced change in the adsorbate-mirage LDOS (arb.units) at the unoccupied foci vs $\varepsilon/\hbar\omega_o$, from Eq. (20), for a system with $\hbar\omega_o=0.050$ eV and $\beta=1$. The corral size parameter a varies by row and the resonance width Δ_K by column, as labeled. The row labeled $a=$''0'' is only meant to imply that $\delta(\varepsilon)=\delta(\varepsilon;a=0)=0$ in Eq. (20).

where $R_{\parallel}$ is the tip shadow-to-adsorbate distance. In both the corraled [Eq. (15)] and free [Eq. (25)] adsorbate cases, the lineshape of the observable signal (as reflected in $\delta\rho$ or $\delta\rho_o$), varies with either corral size or tip position. Manoharan *et al.* presented tunneling spectra (their Fig. 4) for Co focus atoms in which the implication (if not definitive assertion) is that the mirage spectrum is a faithful replication of the on-focus spectrum. The suggestions from the present study are that the Fano-asymmetry issues should show a corral size dependence similar in spirit to the generally accepted tip-to-adsorbate distance dependence expected[10–13] and observed[8,10] for single adsorbate systems. Interestingly, the spectra obtained for the empty focus [their Fig. 4(b)] do show an anti-resonance line with rudimentary oscillatory structure similar to Figs. 4 and 5, bottom left here, which are on comparable energy and corral size scales. In addition, Manoharan *et al.*[1] state that they do ''find that as a is increased monotonically while E is fixed, the mirage is switched on and off. In each period of this switching, the classical path length $2a$ changes by half a Fermi wavelength,'' as previously also accounted for by AS (Ref. 2) and expanded upon here. However, at least on the basis of the published data, it is not possible to further pin down this lineshape issue as such a resolution requires more extensive corral-size-dependent spectra.

Moving on to possible vibrationally embellished mirages, some numerical consequences of the local polaron model spectra obtained from Eq. (20) are displayed in Figs. 5 and 6. Figure 5 shows families of $\delta\rho_v(\vec{R};\varepsilon)$ vs $\varepsilon/\hbar\omega_o$ spectra for a system in which $\Delta_K=0.010$ eV and $\hbar\omega_o=0.050$ eV. The corral size varies as $a=$''0,'' 3, and 6 nm from top to bottom and the electron vibrational coupling parameter $\beta=0$, 0.5, and 1 from left to right, in line with expectations from Eq. (22). The vibration-free ($\beta=0$) left hand column has already been presented and discussed as the paradigm demonstrating corral size effects. In a similar fashion, the top row of curves shows the evolution from the vibration-free pure Lorentzian ($\beta=0$) to the Lorentzian-broadened Poisson distribution that becomes increasingly spread out with a down-shifted leading edge as β increases. Things become much less transparent when the influences of both the corral quantization and the localized vibrational modes are acting, chosing parameter values that are within the realistic range to be expected for the experimentally accessible Kondo systems. Consider both the $\beta=0.5$ and the 1 columns in Fig. 5. (Note that while the $\delta\rho_v$ scales within a column are identical, those from column to column are not.) While it appears that some form of the pure ($a=$''0'') vibrational spectrum persists in the corraled spectra, what cannot be ascertained in a generalizable way is how the vibrational structure will appear; will it be a minimum, a maximum, a point-of-inflection, or what? The problem is that all the important, system-defining energy scales ($\hbar\omega_o$, Δ_K, $\Delta\varepsilon_r$, ε_K) are in the same ~tens-of-meV range and it is this coincidence that hinders one from understanding the trends in terms of an easily identified dominating mechanism slightly perturbed by weaker secondary ones. For instance, at fixed β, variations in a can turn enhanced LDOS into depletions at a given energy. Similarly, for fixed a, variations in β can spread out the vibrational spectrum into new energetic regions favoring corral enhancement or depletion.

Another perspective is illustrated in Fig. 6, where spectra obtained from Eq. (20) with $\hbar\omega_o=0.05$ eV and $\beta=1$ show how quickly an increase in the resonance width wipes out the vestiges of vibrational information embedded in the polaron LDOS. The curves in the left hand column represent the system when $\Delta_K=0.010$ eV and show a vibrational signature. Within the realistic corrals ($a=3$ and 6 nm), already for $\Delta_K=0.025$ eV any vibrational information has been washed out and the observable change in the LDOS is dominated by the oscillatory behavior provided by the corral size quantization. From these examples one must conclude that while some form of polaronlike vibrational signature attached to the quantum mirage is indeed possible, at least within the nanoscale corral sizes and energy parameter ranges characteristic of the Kondo systems that have been studied, this

does not appear to be a promising direction to follow for assured quick and easy spectroscopic rewards.

V. SUMMARY

Select aspects of scanning tunneling spectroscopy of adsorbate/metal substrate systems showing very narrow near-Fermi level resonances (such as Kondo systems) have been considered. The present work was stimulated by the studies of Manoharan, Lutz, and Eigler[1] in which they discovered a quantum mirage or ''phantom atom'' effect when the single Kondo atom is placed at one foci of an elliptical nanocorral of surface atoms and scanning tunneling spectroscopy is carried out over the other foci. The spectrum at the unoccuppied foci appears to be fundamentally related to the directly observed (on top) spectrum of the real atom and it is believed that the foci-to-foci information is communicated by surface-state-electron propagation in which a single scattering from the corral wall (or atoms) is responsible for the focusing. The main question addressed here is to what extent localized vibrational information associated with the occuppied foci adsorbate might also appear in the mirage spectrum. The model of Agam and Schiller[2] for fixed atom, Fermi level resonance tunneling processes within quantum corrals has been extended in energy range and adapted to include adsorbate-substrate and/or intra molecular vibrations in the spirit of localized polarons. Analytic expressions describing the foci-adsorbate-induced change in LDOS experienced at the unoccuppied foci, as a function of the defining system characteristics, namely the corral size (a, hence the corral energies), resonance energies (ε_K) and width (Δ_K), vibrational energies ($\hbar\omega_o$), electron-vibrational coupling (β), and vibrationally induced resonance level shift ($\Delta\varepsilon_r$). Insights into the corral-inspired, Fano line shape have been presented. While aspects of vibrationally augmented quantum mirages could be detectable, the resulting line shapes do not change with systematic variation of controllable parameters in an intuitively useful way that encourages development of STM spectroscopy for this purpose. This is mainly a consequence of the fact that all the relevant energies are comparable ($\sim$tens of meV) and as a result, the description cannot be broken down into separable parts characterized by simple, generic line shapes. More optimistically, it was demonstrated that the form of the spectra is very (usefully!) sensitive to the defining parameters of the surface nanostructure/ellipse. For instance, as a is varied through the narrow range $7\ \mathrm{nm} \leqslant a \leqslant 7.5\ \mathrm{nm}$, the LDOS change transforms from a resonance, to an asymmetric, to an antiresonance form. It remains to be seen whether we will exploit rather than be burdened by this extreme tunneling-spectroscopy nanosensitivity.

*Email address: gadzuk@nist.gov

[1] H. C. Manoharan, C. P. Lutz, and D. M. Eigler, Nature (London) **403**, 512 (2000).

[2] O. Agam and A. Schiller, Phys. Rev. Lett. **86**, 484 (2001).

[3] G. A. Fiete, J. S. Hersch, E. J. Heller, H. C. Manoharan, C. P. Lutz, and D. M. Eigler, Phys. Rev. Lett. **86**, 2392 (2001).

[4] A. A. Aligia, Phys. Rev. B **64**, 121102 (2001); D. Porras, J. Fernandez-Rossier, and C. Tejedor, *ibid.* **63**, 155406 (2001); M. Weissmann and H. Bonadeo, Physica E **10**, 544 (2001).

[5] A. Aligia, Phys. Status Solidi B **230**, 415 (2002).

[6] J. A. Stroscio and D. M. Eigler, Science **254**, 1319 (1991); W. Ho, Acc. Chem. Res. **31**, 567 (1998); L. Bartels, G. Meyer, K. H. Rieder, D. Velic, E. Knoesel, A. Hotzel, M. Wolf, and G. Ertl, Phys. Rev. Lett. **80**, 2004 (1998); X. Bouju, C. Joachim, and C. Girard, Phys. Rev. B **59**, R7845 (1999); S. W. Hla, L. Bartels, G. Meyer, and K. H. Rieder, Phys. Rev. Lett. **85**, 2777 (2000); K. F. Braun and K. H. Rieder, *ibid.* **88**, 096801 (2002); A. Kuhnle, G. Meyer, S. W. Hla, and K. H. Rieder, Surf. Sci. **499**, 15 (2002).

[7] A. C. Hewson, *The Kondo Problem to Heavy Fermions* (Cambridge University Press, Cambridge, 1993).

[8] J. T. Li, W. D. Schneider, R. Berndt, and B. Delley, Phys. Rev. Lett. **80**, 2893 (1998); V. Madhavan, W. Chen, T. Jamneala, M. F. Crommie, and N. S. Wingreen, Science **280**, 567 (1998); M. F. Crommie, J. Electron Spectrosc. Relat. Phenom. **109**, 1 (2000); N. Knorr, M. A. Schneider, L. Diekhoner, P. Wahl, and K. Kern, Phys. Rev. Lett. **88**, 096804 (2002).

[9] T. Jamneala, V. Madhavan, W. Chen, and M. F. Crommie, Phys. Rev. B **61**, 9990 (2000); K. Nagaoka, T. Jamneala, M. Grobis, and M. F. Crommie, Phys. Rev. Lett. **88**, 077205 (2002); M. A. Schneider, L. Vitali, N. Knorr, and K. Kern, Phys. Rev. B **65**, 121406 (2002); O. Y. Kolesnychenko, R. de Kort, M. I. Katsnelson, A. I. Lichtenstein, and H. van Kempen, Nature (London) **415**, 507 (2002).

[10] V. Madhavan, W. Chen, T. Jamneala, M. F. Crommie, and N. S. Wingreen, Phys. Rev. B **64**, 165412 (2001).

[11] A. Schiller and S. Hershfield, Phys. Rev. B **61**, 9036 (2000); O. Ujsaghy, J. Kroha, L. Szunyogh, and A. Zawadowski, Phys. Rev. Lett. **85**, 2557 (2000); H. Kasai, W. A. Dino, and A. Okiji, J. Electron Spectrosc. Relat. Phenom. **109**, 63 (2000).

[12] J. W. Gadzuk and M. Plihal, Faraday Discuss. **117**, 1 (2000).

[13] M. Plihal and J. W. Gadzuk, Phys. Rev. B **63**, 085404 (2001).

[14] U. Fano, Phys. Rev. **124**, 1866 (1961).

[15] J. J. Heremans, S. von Molnar, D. D. Awschalom, and A. C. Gossard, Appl. Phys. Lett. **74**, 1281 (1999).

[16] J. Kliewer, R. Berndt, and S. Crampin, New J. Phys. **3**, 22.1 (2001).

[17] M. F. Crommie, C. P. Lutz, and D. M. Eigler, Science **262**, 218 (1993); E. J. Heller, M. F. Crommie, C. P. Lutz, and D. M. Eigler, Nature (London) **369**, 464 (1994); M. F. Crommie, C. P. Lutz, D. M. Eigler, and E. J. Heller, Surf. Rev. Lett. **2**, 127 (1995); J. T. Li, W. D. Schneider, R. Berndt, and S. Crampin, Phys. Rev. Lett. **80**, 3332 (1998); J. Li, W. D. Schneider, S. Crampin, and R. Berndt, Surf. Sci. **422**, 95 (1999); J. Kliewer, R. Berndt, and S. Crampin, Phys. Rev. Lett. **85**, 4936 (2000); W. D. Schneider, Surf. Sci. **514**, 74 (2002).

[18] R. P. Feynman and A. R. Hibbs, *Quantum Mechanics and Path Integrals* (McGraw-Hill, New York, 1965).

[19] E. J. Heller, Phys. Rev. Lett. **53**, 1515 (1984); P. W. O'Connor, S. Tomsovic, and E. J. Heller, J. Stat. Phys. **68**, 131 (1992).

[20] A. Bringer, J. Harris, and J. W. Gadzuk, J. Phys.: Condens. Matter **5**, 5141 (1993).

[21] N. Rivier and T. J. Coe, J. Phys. C **10**, 4471 (1977).

[22] D. Sherrington and S. von Molnar, Solid State Commun. **16**, 1347 (1975).

[23] A. C. Hewson and D. M. Newns, J. Phys. C **12**, 1665 (1979); A.

C. Hewson and D. M. Newns, *ibid.* **13**, 4477 (1980).
[24] C. O. Almbladh and P. Minnhagen, Phys. Rev. B **17**, 929 (1978); J. W. Gadzuk, *ibid.* **20**, 515 (1979).
[25] M. Cini, Phys. Rev. B **17**, 2486 (1978); M. Cini and A. d'Andrea, J. Phys. C **21**, 193 (1988).
[26] O. Gunnarsson and K. Schonhammer, Phys. Rev. Lett. **50**, 604 (1983).
[27] G. D. Mahan, *Many-Particle Physics* (Plenum, New York, 1990).
[28] D. J. Scalapino and S. M. Marcus, Phys. Rev. Lett. **18**, 459 (1967); J. Lambe and R. C. Jaklevic, Phys. Rev. **165**, 821 (1968); C. Caroli, C. Combescot, P. Nozières, and D. Saint-James, J. Phys. C **5**, 21 (1972); J. Kirtley, D. J. Scalapino, and P. K. Hansma, Phys. Rev. B **14**, 3177 (1976); *Inelastic Electron Tunneling Spectroscopy*, edited by T. Wolfram (Springer, Berlin, 1978).
[29] N. S. Wingreen, K. W. Jacobsen, and J. W. Wilkins, Phys. Rev. B **40**, 11834 (1989); P. Hyldgaard, S. Hershfield, J. H. Davies, and J. W. Wilkins, Ann. Phys. (N.Y.) **236**, 1 (1994).
[30] J. W. Gadzuk, Phys. Rev. B **44**, 13466 (1991).
[31] G. Binnig, N. Garcia, and H. Rohrer, Phys. Rev. B **32**, 1336 (1985); B. N. J. Persson and A. Baratoff, Phys. Rev. Lett. **59**, 339 (1987); B. N. J. Persson, Phys. Scr. **38**, 282 (1988); M. A. Gata and P. R. Antoniewicz, Phys. Rev. B **47**, 13797 (1993); K. Stokbro, B. Y. K. Hu, C. Thirstrup, and X. C. Xie, *ibid.* **58**, 8038 (1998); M. A. Gata and P. R. Antoniewicz, *ibid.* **60**, 8999 (1999); N. Mingo and K. Makoshi, Surf. Sci. **438**, 261 (1999); N. Lorente and M. Persson, Phys. Rev. Lett. **85**, 2997 (2000); Faraday Discuss. **117**, 277 (2000); N. Lorente, M. Persson, L. J. Lauhon, and W. Ho, Phys. Rev. Lett. **86**, 2593 (2001); T. Mii, S. Tikhodeev, and H. Ueba, Surf. Sci. **502**, 26 (2002).
[32] A. Herzenberg, J. Phys. B **1**, 548 (1968); D. T. Birtwistle and A. Herzenberg, *ibid.* **4**, 53 (1971); W. Domcke and L. S. Cederbaum, *ibid.* **10**, L47 (1977); **13**, 2829 (1980); J. P. Gauyacq, *ibid.* **23**, 3041 (1990); J. P. Gauyacq, J. Chem. Phys. **93**, 384 (1990).
[33] A. Kaminski, Y. V. Nazarov, and L. I. Glazman, Phys. Rev. Lett. **83**, 384 (1999).
[34] P. Nordlander, N. S. Wingreen, Y. Meir, and D. C. Langreth, Phys. Rev. B **61**, 2146 (2000).
[35] J. Tersoff and D. R. Hamann, Phys. Rev. B **31**, 805 (1985).
[36] N. D. Lang, Phys. Rev. Lett. **56**, 1164 (1986); C. J. Chen, *Introduction to Scanning Tunneling Microscopy* (Oxford University Press, New York, 1993); J. W. Gadzuk, Phys. Rev. B **47**, 12832 (1993); *Scanning Tunneling Microscopy III. Theory of STM and Related Scanning Probe Methods*, edited by R. Wiesendanger and H.-J. Guntherodt (Springer-Verlag, Berlin, 1993).
[37] N. D. Lang, Phys. Rev. B **34**, 5947 (1986).
[38] N. Memmel, Surf. Sci. Rep. **32**, 93 (1998).
[39] J. W. Gadzuk, J. Electron Spectrosc. Relat. Phenom. **99**, 321 (1999).
[40] C. Lanczos, J. Res. Natl. Bur. Stand. **45**, 255 (1950).
[41] V. Heine, Solid State Phys. **35**, 1 (1980); R. Haydock, *ibid.* **35**, 216 (1980).
[42] J. W. Gadzuk, Phys. Rev. B **31**, 6789 (1985); Annu. Rev. Phys. Chem. **39**, 395 (1988); Surf. Sci. **342**, 345 (1995).
[43] N. D. Lang and W. Kohn, Phys. Rev. B **7**, 3541 (1973); P. J. Jennings and R. O. Jones, Adv. Phys. **37**, 341 (1988).
[44] L. S. Cederbaum and W. Domcke, Adv. Chem. Phys. **36**, 205 (1977).
[45] W. B. Thimm, J. Kroha, and J. von Delft, Phys. Rev. Lett. **82**, 2143 (1999).
[46] S. BarAd, M. V. Marquezini, S. Mukamel, and D. S. Chemla, Phys. Rev. Lett. **78**, 1363 (1997).